卷册检索号 SEARCH NO. OF THE VOLUME
MLHVDC-LCS-ECI-DD-EC-D0402 30-B003701S-D0402

第 1 页 PAGE　共 1 页 OF

图纸文件目录（首页）

CATALOG OF DRAWING DOCUMENTS (HEAD PAGE)

拉合尔±660kV换流站 工程 施工图 阶段
±660kV Lahore Converter Station PROJECT Detail Design DESIGN STAGE

电气 专业 第 04 卷 第 02 册
Electrical SPECIALITY VOLUME BOOK

卷册名称 户外照明——站前区与建维区
Volume name Outdoor Lighting-Operation&Maintenace Area and Temporary Building Area

批　准 APPROVED BY	2019.07.03
审　核 REVIEWED BY	
设计/勘测 DESIGNED BY/ SURVEYED BY	2019.07.01
图纸 DRAWING 6 张 NOS.	打印件 PRINTED COPIES 0 本 NOS.

序号 No.	图　号 DRAWING NO.	文件名称 DOCUMENT TITLE	版本 EDITION	张 NOS.	本 NOS.	备注 REMARKS
01	30-B003701S-D0402-001	卷册说明 Description of volume	A	1		
02	30-B003701S-D0402-002	站前区与建维区照明布置图 Layout of outdoor lighting(Operation&Maintenace Area and Temporary Building Area)	A	1		
03	30-B003701S-D0402-003	室外照明系统图 System diagram of lighting power box	A	1		
04	30-B003701S-D0402-004	照明控制箱原理图 Lighting control box schematic	A	1		
05	30-B003701S-D0402-005	户外照明灯具安装示意图 Installation schematic drawing of outdoor lighting lamps	A	1		
06	30-B003701S-D0402-006	材料汇总表 Material summary list	A	1		

注:

卷册说明

Volume description

Design scope description

1.1 The main lighting design scope of this volume is as follows:

Front area,Building and maintenance area:

1.2 The range of lighting materials in this volume is as follow:

The power supply of outdoor lighting circuit in auxiliary production area and Front Station Area is derived from the lighting box ZMX1 on the first floor of the office building in Front Station Area.

1.3 Lighting design in each building is in the electrical volume of buildings.

1.4 The construction of this volume is the responsibility of the Civil Engineering B package.The material of luminaires and cables are supplied by the CET.

2.1 Symbol description

Note: lamp number $\frac{\text{Luminaire capacity}}{\text{Installation height (m)}}$

Note: installation height "–" means to be installed

Circuit annotation: ZMXa–b

a: lighting power box no. b: loop no.

2.2 Equipment selection

(1) The selection of lamps and lanterns shall be of high energy efficiency grade, environmental protection and corrosion resistance. The range of voltage fluctuation allowed by the lamps shall not be less than 10%.

(2) The bracket manufacturer of the light casting lamp shall supply the bracket and shall be hot–galvanized and shall be a grounding piece connected to the copper nose that matches the 50mm² copper stranded wire.

2.3 Lighting power box and lighting control box

(1) Power supply voltage of distribution box and use voltage are 380/220V.

(2)Three–phase four wire system, lighting entrance neutral point grounding system directly, namely, TN – C – S system, lighting box in the power cord, in which sex line (N) and protection of ground wire (PE) to merge, and entrance after neutral line (N) and the protection of ground wire (PE) separately, namely, TN – S system.

(3) Waterproof type and stainless steel shell (not less than 2mm thickness), the protection level shall meet the requirements of IP55. Taking into account the situation of heavy rain in the area, oblique structure should be adopted on the top of the box

(4) If the wire in the box is not suitable for welding, the wiring terminal shall be used.

(5) The equipment and lead arrangement of each loop in the box should be reasonable and should have good extensibility.

(6) The conductor in the box should be multi–colored to distinguish the circuit and phase sequence, and the two ends shall be marked for maintenance. The names of each circuit should be specified in the box.

(7) All lighting power boxes shall meet the requirements of state grid company《national grid relay protection cabinet, screen and terminal box manufacturing specification》.

(8) Leakage current protection is installed in the lighting power box.

(9)The lighting case shall have a grounding piece connected to the copper nose that matches the 50mm² copper stranded wire.

(10) The annotation meaning of the switch:

S202–C16

C is the type of tripping device, 16 is the switching rated current, and the sencond "2"of S202 is the switch number

2.4 Layout principles and requirements of lamps and lanterns

(1) The installation of all fixtures shall not interfere with the installation and operation of other facilities, and shall meet the requirements of the safety net spacing of each voltage level.

(2) The street lamp is generally installed with the road 1.0 m, and The spacing of the main road lawn lights should be 10~15m, and the spacing of non–main road lawn lights should be 15~20m.The lighting lamp is installed according to the location of the diagram. According to the actual situation of the site, it can be adjusted appropriately.

(3) The base of the lamp is outdoor 0.15m above ±0.00. The installation diagram of the lamp is shown in the relevant drawing of this volume.

(4) The purchase of lighting lamps should give priority to high quality factory products such as huarong lighting plant. The power factor is not less than 0.9.

(5) The spacing of the main road lawn lights should be 10~15m, and the spacing of non–main road lawn lights should be 15~20m.

2.5 Lighting cable laying

(1) In addition to laying on the cable trench, the lighting cable should be laid through the galvanized steel pipe , and the buried depth shall not be less than 0.5m below 0.00 outdoors.

(2) The bending radius of the cable shall not be less than 10 times the diameter of the tube.

(3) Power cables and control cables shall be laid separately.

2.6 Outdoor lighting grounding

(1) For the circuit equipped with leakage protector, the zero line of the circuit below is not allowed to be grounded repeatedly.

(2) The distribution box housing shall be reliably grounded, and the grounding wire shall be connected to the metal housing/ground terminal of the lamp.

(3) All lamp posts shall be connected to the main grid by 50mm² copper stranded.

(4)Galvanized steel pipe grounding: which connected grounding bus in the cable trench to connect to the ground lead by –50x5 hot–galvanized flat steel; and which buried directly in the soil connect with the main grounding network by –50x5 hot–galvanized flat steel.

设计范围说明

1.1 本卷册主要负责的照明设计范围如下:

站前区和建维区

1.2 建维区、站前区的户外照明回路电源引自站前区办公楼内一层照明箱ZMX1。

1.3 站用电屏至照明配电箱的进线电缆开列在相应的站用电系统卷册中。

1.4 本卷册施工由土建B包负责,材料表中的灯具和电缆甲供。

全站照明设计

2.1 符号说明

回路灯具的标注: 灯数 $\frac{\text{灯具容量}}{\text{安装高度(m)}}$

注:安装高度中的"–"表示落地安装

回路标注说明:ZMXa–b

a:户外照明箱编号 b:回路编号

2.2 设备选型

(1)灯具选型见相关图纸,灯具应选用能效等级高、环保、防腐蚀型,灯具允许的电压波动范围应不小于10%。

(2)投光灯灯具支架厂家配供,且应热镀锌,并应有与50mm²铜绞线相配的铜鼻子相连的接地件。

2.3 照明

(1)配电箱供电电压和使用电压为380/220V。

(2)照明进线采用三相四线制,中性点直接接地系统,即TN–C–S系统,照明箱的电源线中,其中性线(N线)和保护地线(PE线)合并,而进线以后的中性线(N线)和保护地线(PE线)分开,即TN–S系统。

(3)配电箱采用防水型、不锈钢外壳(厚度不小于2mm),防护等级应满足IP55的要求。考虑到当地会出现暴雨的情况,箱体顶需采用斜型结构。

(4)箱内导线分接不宜焊接,应采用接线端子。

(5)箱内各回路的设备、导线布置应合理,且应具有良好的可扩充性。

(6)箱内的导线应采用多色以区别回路和相序,导线两端应加标志以便维修。应在箱内注明各回路的名称。

(7)所有照明箱应满足国家电网公司《国家电网继电保护柜、屏及端子箱制造规范》的要求。

(8)照明箱内装漏电电流保护。

(9)照明箱外壳应有与50mm²铜绞线相配的铜鼻子相连的接地件。

(10)开关的标注含义:

S202–C16

C为脱扣器类型,16为开关额定电流,S202中的第二个"2"为开关极数

2.4 灯具布置原则和要求

(1)所有灯具的安装应不妨碍其它设施的安装与运行、维护,并且应满足各电压等级安全净距的要求。

(2)站内路灯一般距道路边沿1.0m安装,间距宜为10~15米;高杆路灯距道路边沿不小于1.5m安装,间距宜为15~20米;根据现场实际情况可适当调整。

(3)灯具的基础为户外±0.00以上0.15m。灯具安装示意图见本卷册的有关图纸。

(4)照明灯具由华荣照明厂供货,功率因数应不小于0.9。

(5)主干道草坪灯布置间距宜为10~15m、非主干道草坪灯布置间距宜为15~20m。

2.5 照明电缆敷设

(1)照明电缆除敷设在电缆沟外,均应采用穿镀锌钢管敷设,埋深不小于户外±0.00以下0.5m。

(2)电缆穿管的弯曲半径不应小于管径的10倍。

(3)动力电缆与控制电缆不应共管敷设。

2.6 户外照明接地

(1)对装有漏电保护器的回路,该回路其以下的零线不允许有重复接地。

(2)配电箱外壳应可靠接地,接地线与灯具的金属外壳/接地端子相连接。

(3)所有灯具灯杆通过50mm²铜绞线就近接入主地网。

(4)镀锌钢管接地:与电缆沟连接的一端通过–50x5热镀锌扁钢接至电缆沟内通长接地扁钢,直埋在土壤里的一端则通过–50x5热镀锌扁钢与就近主地网连接。

Reference Drawings

Drwg. No.	Title

Revisions

	Name	Date	Notes

巴基斯坦默蒂亚里—拉合尔±660kV直流输电工程

±660kV HVDC Project from Matiari to Lahore in Pakistan

NATIONAL TRANSMISSION & DESPATCH COMPANY (NTDC) LIMITED PAKISTAN

CONTRACTOR 国家电网 STATE GRID 中国电力技术装备有限公司 CHINA ELECTRIC POWER EQUIPMENT AND TECHNOLOGY CO.,LTD.

SUBCONTRACTOR East China Electric Power Design Institute Co.,Ltd.

拉合尔±660kV换流站

±660kV Lahore Converter Station

设计阶段 PHASE: 施工图 Detail Design

M L H V D C - L C S - E C I - D D - E C - 0 4 0 2 - 0 0 1 A

	姓名 Name	日期 Date
设计 Designed	李云飞	2019.07.01
校核 Checked	李志辉	2019.07.02
审核 Reviewed		
批准 Approved	郑煜	2019.07.03

卷册说明

Description of volume

比例 Scale: / 图号 DWG NO.: 30-B003701S-D0402-001 版本 REV.: A

594X841

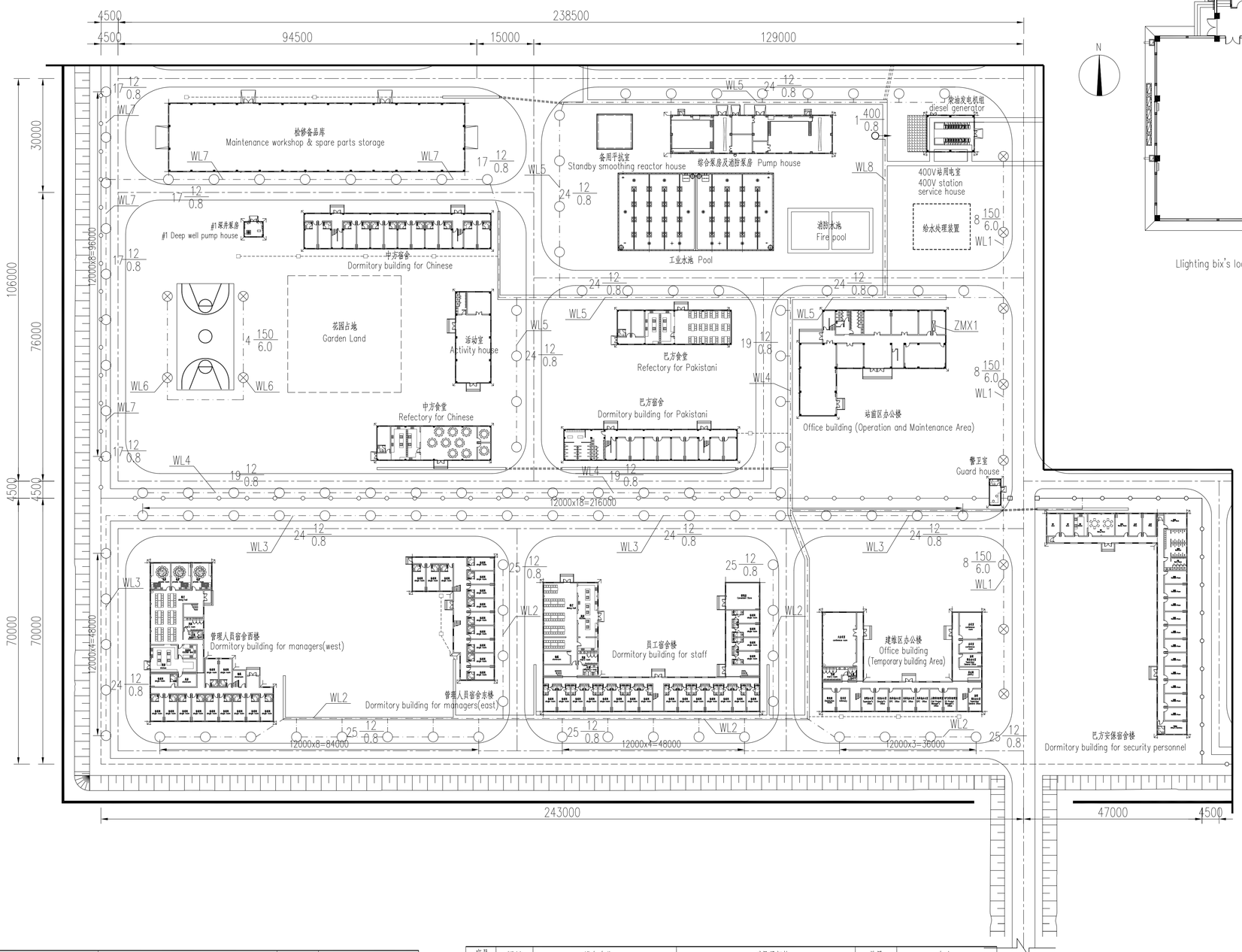

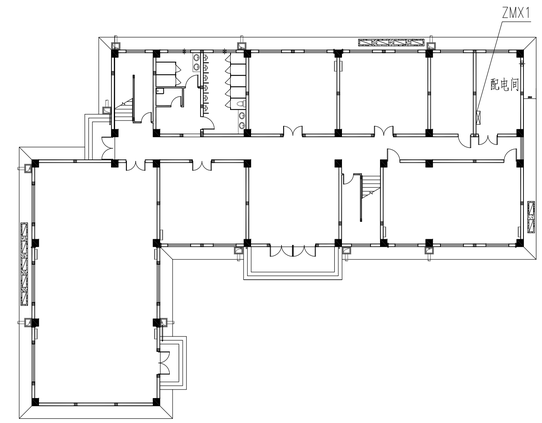

站前区办公楼一层照明箱布置详图

Llighting bix's location at the first floor of Office building for operating crew

说明：

1、灯具位置可根据现场情况适当调整，避开建筑物入口，但应满足各电压等级安全净距要求。

2、站内路灯一般距道路边沿1.0m安装，间距宜为10~15米；高杆路灯距道路边沿不小于1.5m安装，间距宜为15~20米；根据现场实际情况可适当调整。

3、ZMX1照明配电箱布置于配电间内，嵌墙安装。配电箱进出线埋管埋至电缆沟，进线电缆开列在相应的站用电系统卷册中。

4、灯具标注说明：

$D\frac{E}{F}$ D表示回路中该型灯具的数量
E表示该型灯具的额定功率
F表示该型灯具灯杆的高度，详见本分册005图

Note:

1. The position of the lamp can be adjusted according to the situation, avoiding the entrance of the building, but it should meet the safety net distance requirement of each voltage level.
2. The street lamp is generally installed with the road 1.0 m. The spacing of the lamps should be 10~15 meters. The high rod street lamp should be installed at a distance of not less than 1.5m from the edge of the road, and the spacing of the lamps should be 15~20 meters; According to the actual situation of the site, it can be adjusted appropriately.
3. The ZMX1 lighting distribution box is arranged in the power distribution room and is installed in the wall. The lighting distribution box incoming cable and out line cable pipes are buried in the cable trench.The incoming cable of the lighting distribution box is listed in the corresponding station power system volume.
4. Description of lamps and lanterns:

$D\frac{E}{F}$ D indicates the number of lamps in the loop
E represents the rated power of the lamp
F indicates the height of this type of rod. Please refer to This volumes for details.

序号 Sequence Number	图例 legend	设备名称 Equipment name	型号及规格 Model and specification	数量 quantity	备注 Remark
1	⊗	高杆路灯 High rod lamp	ZD005-Ⅱ AC220V 150W 光通量15000lm AC220V 150W the luminous flux is 15000 lm	12 sets	安装高度：6m Installation height：6m
2	○	站内路灯 Street lamp	CP02-XL AC220V 12W 光通量1440lm AC220V 12W the luminous flux is 1440 lm	109 sets	安装高度：0.8m Installation height：0.8m
3		投光灯（单杆单灯） Project-light lamp (every rod with one lamp)	GT302-N400 AC220V 400W 光通量48000lm AC220V 400W the luminous flux is 48000 lm	1 set	安装高度：1.5m Installation height：1.5m
4	⊠	照明箱 Light power box	防水，不锈钢外壳，防护等级满足IP55 Waterproof ,stainless steel shell, the protection level shall meet the requirements of IP55	1 set	ZMX1
5		镀锌钢管 Galvanized steel pipe	ø32	2200 m	
6		电缆 Cables	ZB-YJV22-0.6/1.0-3X6	3450 m	

序号 Sequence Number	图例 legend	设备名称 Equipment name	型号及规格 Model and specification	数量 quantity	备注 Remark
7		接线盒 Junction Box		122 pcs	
8		热镀锌扁钢 Hot-galvanized flat steel	-50x5	850 m	
9		铜绞线 Copper stranded wire	50mm²	850 m	灯具支架接地用 Earthing of lamp support
10		铜鼻子 Copper terminal	DT-50	122 sets	接地用 Earthing
11		放热焊点 Exothermic welding point	A:50mm² B:120mm²	122 pcs	与主地网连接用 Connecting with the main and local network
12		膨胀螺栓 Expansion bolt	M10x120	327 sets	站内路灯固定用 Street lamp fixed
13		膨胀螺栓 Expansion bolt	M12x120	4 sets	站内投光灯固定用 Project-light lamp fixed
14		地脚螺栓 Anchor bolt	M18x800 (土建预埋 Civil construction pre-buried)	48 sets	高杆路灯固定用 High rod lamp fixed
15		螺栓 Bolt	M8x25	122sets	灯具接地用 Lamp for earthing

Reference Drawings

Drwg. No.	Title

Revisions

	Name	Date	Notes

巴基斯坦默蒂亚里—拉合尔±660kV直流输电工程
±660kV HVDC Project from Matiari to Lahore in Pakistan

NATIONAL TRANSMISSION & DESPATCH COMPANY (NTDC) LIMITED PAKISTAN

CONTRACTOR 国家电网 STATE GRID 中国电力技术装备有限公司 CHINA ELECTRIC POWER EQUIPMENT AND TECHNOLOGY CO.,LTD.

SUBCONTRACTOR East China Electric Power Design Institute Co.,Ltd.

拉合尔±660kV换流站
±660kV Lahore Converter Station

设计阶段 PHASE: 施工图 Detail Design

M L H V D C - L C S - E C I - D D - E C - 0 4 0 2 - 0 0 2 A

	姓名 Name	日期 Date
设计 Designed	李云鹏	2019.07.01
校核 Checked	李建辉	2019.07.02
审核 Reviewed		
批准 Approved	郑煜	2019.07.03

站前区与建维区照明布置图
Layout of outdoor lighting
(Operation&Maintenace Area and Temporary Building Area)

比例 Scale: 1:600
图号 DWG NO.: 30-B003701S-D0402-002
版本 REV.: A

594X841

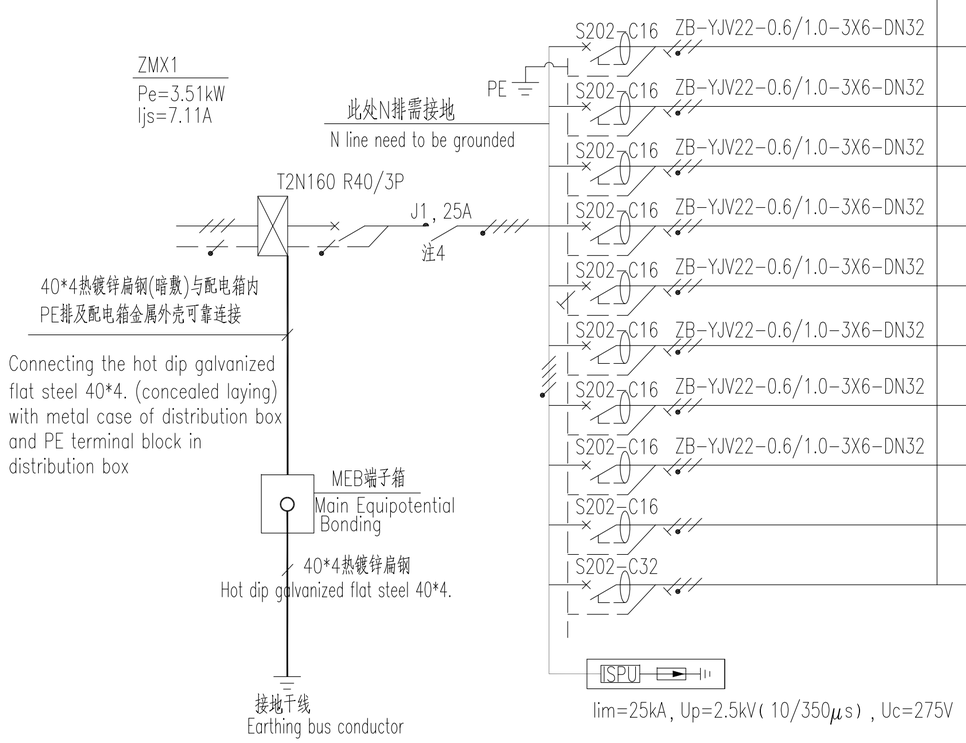

Phase position 就地设备	Phase position 相 位	Circuit number 回路编号	Capacity 容量(kW)	Current 电流(A)	Purpose 用 途
	L1	WL1	1.20	7.27	high rod lamp(Station Road) 高杆路灯(站区道路)
	L2	WL2	0.30	1.82	Street lamp 站内路灯
	L3	WL3	0.288	1.75	Street lamp 站内路灯
	L1	WL4	0.228	1.38	Street lamp 站内路灯
	L2	WL5	0.288	1.75	Street lamp 站内路灯
	L3	WL6	0.60	3.64	Basketball court high rod lamp 篮球场高杆路灯
	L3	WL7	0.204	1.24	Street lamp 站内路灯
	L2	WL8	0.40	2.42	project-light lamp 投光灯
	L2	WL9			Standby 备用
	L3	WL10			Standby 备用

说明:

1.站前区与建维区室外照明回路电源引自站前区办公楼ZMX1照明箱。
2.站前区与建维区室外照明回路进线电缆开列在站用电卷册。
3.照明箱采用防水型、不锈钢外壳(厚度不小于2mm),防护等级应满足IP55的要求。照明配电箱需嵌墙安装,下沿距地1.5米。
4.J1为接触器触点,由远方控制关合。
5.户外照明回路采用远控方案。
5、照明箱内应单独设置PE排(不小于-25x4的铜排),并应接地。
6、照明箱内母线应装设带电显示装置,母排应加装热缩绝缘护套。
7、漏电开关动作电流值为30mA。

Note:

1、The power supply of the outdoor lighting loop in the maintenance area and the front area of the station is drawn from the office building ZMX1 lighting box in the front area of the station。
2、The outdoor lighting box 1 incoming cable is listed in the volume of station power。
3、The light power box is made of Waterproof type and stainless steel shell (not less than 2mm thickness), the protection level shall meet the requirements of IP55. The lighting distribution box needs to be installed in the wall, and the lower edge is 1.5 meters away from the ground.
4、J1 is contactor contact, which is controlled by remote control.
5、The outdoor lighting circuit adopts remote control scheme。
5、The PE row (-25x4 copper row) should be set separately in the light power box and should be grounded.
6、The busbar in the lighting power box shall be equipped with a live display device, and the busbar shall be provided with a heat-shrinkable insulation sheath.
7、Leakage switch action current value is 30mA.

Reference Drawings

Drwg. No.	Title

Revisions

	Name	Date	Notes

巴基斯坦默蒂亚里—拉合尔±660kV直流输电工程
±660kV HVDC Project from Matiari to Lahore in Pakistan

NATIONAL TRANSMISSION & DESPATCH COMPANY (NTDC) LIMITED PAKISTAN

CONTRACTOR 国家电网 STATE GRID 中国电力技术装备有限公司 CHINA ELECTRIC POWER EQUIPMENT AND TECHNOLOGY CO.,LTD.

SUBCONTRACTOR East China Electric Power Design Institute Co.,Ltd.

拉合尔±660kV换流站
±660kV Lahore Converter Station

设计阶段 PHASE: 施工图 Detail Design

M L H V D C - L C S - E C I - D D - E C - 0 4 0 2 - 0 0 3 A

	姓名 Name	日期 Date
设计 Designed	李方亮	2019.07.01
校核 Checked	李建辉	2019.07.02
审核 Reviewed		
批准 Approved	郑煜	2019.07.03
比例 Scale		图号 DWG NO.

室外照明系统图
System diagram of lighting power box

30-B003701S-D0402-003

版本 REV. A

420X594

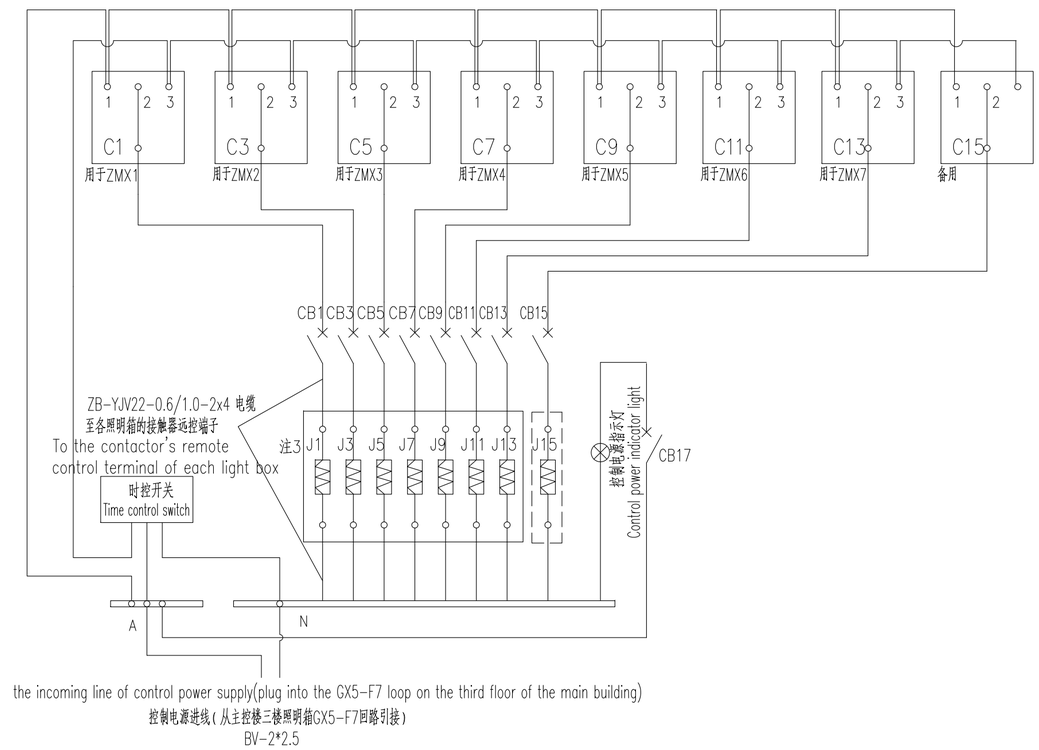

道路照明控制箱(主控楼三楼)

Road lighting control box
(Control building, third floor)

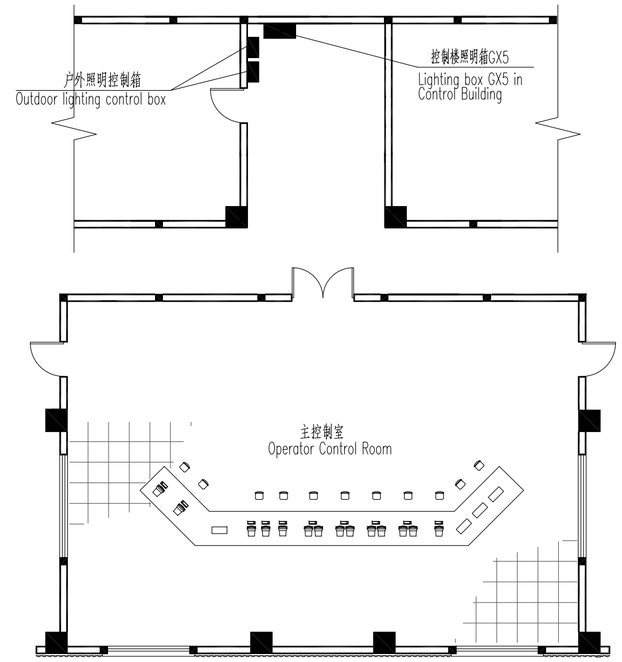

主控制楼三楼平面图(局部)

Floor plan of main control building 3rd floor (partial)

Note:

1. C1、C3、C5、C7、C9、C11、C13 and C15 is the control device, and the functions are as follows:
   When the control switch is pressed to position 1, the lamp is in an electrified state;
   When the control switch is pressed to position 2, the lamp is in the shutdown state;
   When the control switch is pressed to position 3, the lamp is under automatic control.
2. CB1、CB3、CB5、CB7、CB9、CB11、CB13、CB15 and CB17 is air switch (single-phase) S201-C6.
3. J1、J3、J5、J7、J9、J11、J13 and J15 is the remote control terminal of the contactor. J1 is connected to lighting box on the first floor of the office building in the front area, J3 and J5 is connected to lighting box in the DC field, J7、J9、J11 and J13 are connected to lighting box in the AC field and AC filter.
4. The outdoor lighting control box is installed in the third floor of the main control building in dark, with the lower edge 1.3m from the ground.The outdoor lighting control box is listed in the volume of D0401.
5. The outgoing cables of the control box enter under the active floor of the main control room through embedded pipes.The power of the control box is connected from the GX5-F7 loop on the third floor of the main building.
6. The control box is equipped with a ground terminal, which is connected with PE line.The control box housing should be grounded.

注:

1. C1、C3、C5、C7、C9、C11、C13和C15为控制装置,功能如下:
   当控制开关拨至1号位置时,灯处于通电状态;
   当控制开关拨至2号位置时,灯处于停运状态;
   当控制开关拨至3号位置时,灯处于自动控制状态。
2. CB1、CB3、CB5、CB7、CB9、CB11、CB13、CB15和CB17为空气开关(单相)S201-C6。
3. J1、J3、J5、J7、J9、J11、J13和J15为接触器的远控端子,J1引接站前区办公楼内一层照明箱,J3和J5引接直流场区域户外照明箱,J7、J9、J11和J13引接交流场及交流滤波器区域户外照明箱。
4. 户外照明控制箱设置在主控楼三楼,暗装,下沿距地面1.3米。户外照明控制箱箱体开列在D0401卷册。
5. 控制箱出线电缆经埋管进入主控室内活动地板下,控制箱电源从主控楼三楼照明箱GX5-F7回路引接。
6. 控制箱内设接地端子,与PE线相连。控制箱外壳应接地。

序号 Sequence Number	设备名称 Equipment name	型号及规格 Model and specification	数量 quantity	备注 Remark
1	电缆 Cables	ZB-YJV22-0.6/1.0-2x4	330 m	本卷册只开列ZMX1的电缆 This volume only list the cables of ZMX1

Reference Drawings

Drwg. No.	Title

Revisions

	Name	Date	Notes

巴基斯坦默蒂亚里—拉合尔±660kV直流输电工程

±660kV HVDC Project from Matiari to Lahore in Pakistan

NATIONAL TRANSMISSION & DESPATCH COMPANY (NTDC) LIMITED PAKISTAN

CONTRACTOR 国家电网 STATE GRID 中国电力技术装备有限公司 CHINA ELECTRIC POWER EQUIPMENT AND TECHNOLOGY CO.,LTD.

SUBCONTRACTOR East China Electric Power Design Institute Co.,Ltd.

拉合尔±660kV换流站

±660kV Lahore Converter Station

设计阶段 PHASE: 施工图 Detail Design

M L H V D C - L C S - E C I - D D - E C - 0 4 0 2 - 0 0 4 A

	姓名 Name	日期 Date
设计 Designed	李云惠	2019.07.01
校核 Checked	李光辉	2019.07.02
审核 Reviewed		
批准 Approved	郑煜	2019.07.03
比例 Scale		图号 DWG NO.

照明控制箱原理图

Lighting control box schematic

30-B003701S-D0402-004

版本 REV. A

420X594

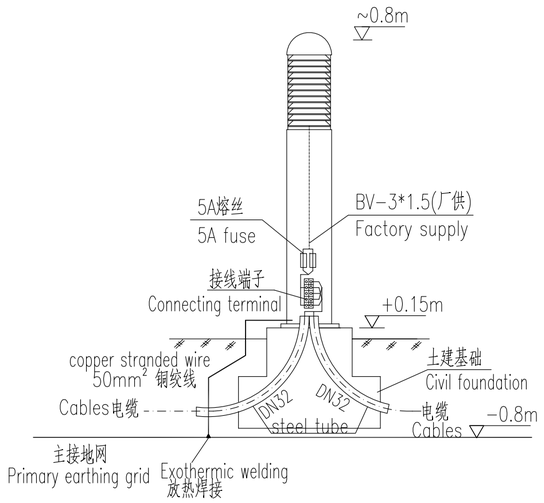

户外站内路灯安装图

Installation drawing of outdoor street lamp

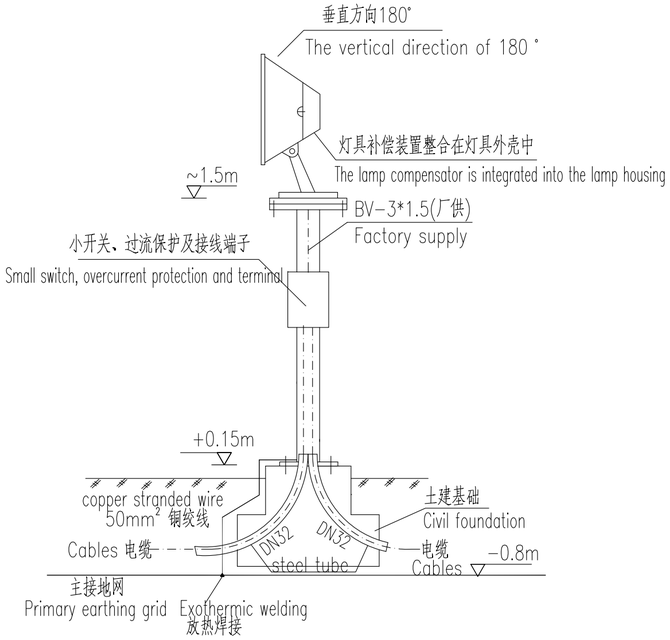

户外投光灯安装示意图

Installation drawing of outdoor project-light lamp

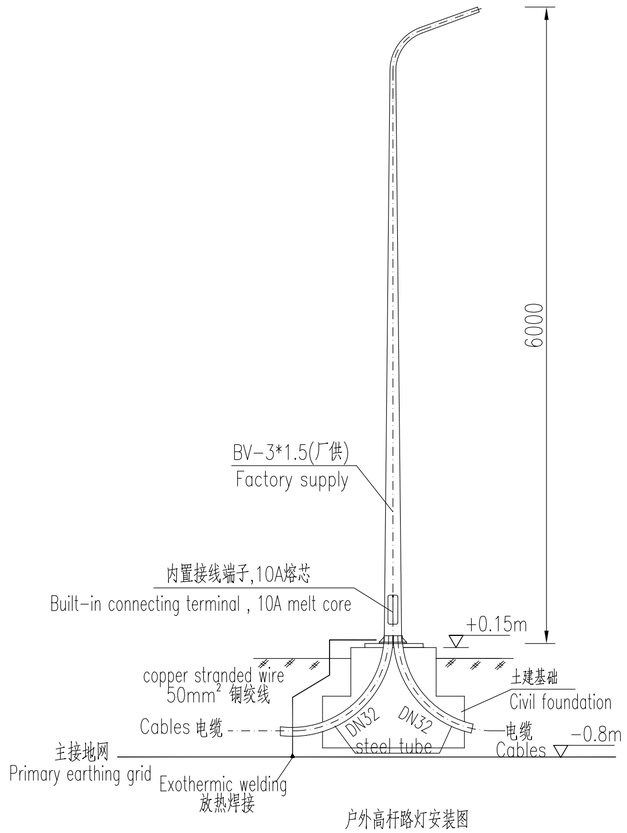

户外高杆路灯安装图

Installation drawing of outdoor High rod lamp

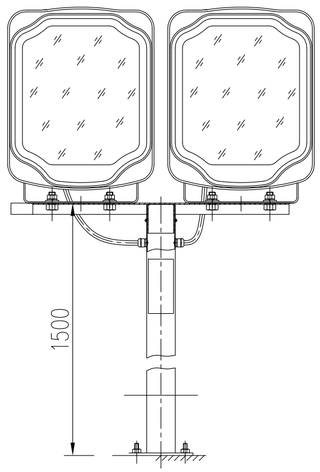

户外投光灯安装图(单杆双灯)

Installation drawing of outdoor project-light lamp

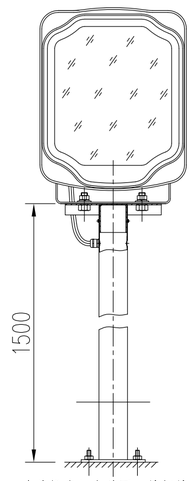

户外投光灯安装图(单杆单灯)

Installation drawing of outdoor project-light lamp

说明:

1.灯具厂家应提供配套附件盒。

2.本图未按比例绘制,仅供示意用。

3.灯具与50mm²铜绞线可靠连接接地,铜绞线与主接地网连接。

4.灯具接地引下线方向全站统一朝南。

5.灯具基础详见图纸D0401-007。

Note:

1. The manufacturer of lamps and lanterns should provide the supporting accessories box.

2. This figure is not drawn to scale, only for signal purpose.

3. The lamp is connected with 50mm² copper stranded wire , which is connected to the primary earthing grid at both ends of the copper stranded wire.

4.The grounding direction of the lamp in the whole stationis led down is facing south.

5.The lamp base is shown in the figure of D0401-007.

Reference Drawings

Drwg. No.	Title

Revisions

	Name	Date	Notes

巴基斯坦默蒂亚里—拉合尔±660kV直流输电工程

±660kV HVDC Project from Matiari to Lahore in Pakistan

NATIONAL TRANSMISSION & DESPATCH COMPANY (NTDC) LIMITED PAKISTAN

CONTRACTOR 国家电网 STATE GRID 中国电力技术装备有限公司 CHINA ELECTRIC POWER EQUIPMENT AND TECHNOLOGY CO.,LTD.

SUBCONTRACTOR East China Electric Power Design Institute Co.,Ltd.

拉合尔±660kV换流站

±660kV Lahore Converter Station

设计阶段 PHASE: 施工图 Detail Design

M L H V D C - L C S - E C I - D D - E C - 0 4 0 2 - 0 0 5 A

	姓名 Name	日期 Date
设计 Designed	李亨惠	2019.07.01
校核 Checked	李建辉	2019.07.02
审核 Reviewed		
批准 Approved	郑煜	2019.07.03
比例 Scale		图号 DWG NO.

户外照明灯具安装示意图

Installation schematic drawing of outdoor lighting lamps

30-B003701S-D0402-005

版本 REV. A

420X594

材料表 Material list

序号 Sequence Number	图例 legend	设备名称 Equipment name	型号及规格 Model and specification	数量 quantity	备注 Remark
1	⊗	高杆路灯 High rod lamp	ZD005-Ⅱ, AC220V 150W 光通量15000lm AC220V 150W the luminous flux is 15000 lm	12 sets	安装高度 Installation height: 6m 材料甲供 Supplied by the CET
2	○	站内路灯 Street lamp	CP02-XL AC220V 12W 光通量1440lm AC220V 12W the luminous flux is 1440 lm	109 sets	安装高度 Installation height: 0.8m 材料甲供 Supplied by the CET
3		投光灯（单杆单灯） Project-light lamp (every rod with one lamp)	GT302-N400 AC220V 400W 光通量48000lm AC220V 400W the luminous flux is 48000 lm	1 set	安装高度 Installation height: 1.5m 材料甲供 Supplied by the CET
4	⊠	照明箱 Light power box	防水，不锈钢外壳，防护等级满足IP55 Waterproof ,stainless steel shell, the protection level shall meet the requirements of IP55	1 set	ZMX1
5		镀锌钢管 Galvanized steel pipe	ø32	2200 m	
6		电缆 Cables	ZB-YJV22-0.6/1.0-3X6	3450 m	材料甲供 Supplied by the CET
7		接线盒 Junction Box		122 pcs	
8		热镀锌扁钢 Hot-galvanized flat steel	-50x5	850 m	
9		铜绞线 Copper stranded wire	$50mm^2$	850 m	灯具支架接地用 Earthing of lamp support
10		铜鼻子 Copper terminal	DT-50	122 sets	接地用 Earthing
11		放热焊点 Exothermic welding point	A:$50mm^2$ B:$120mm^2$	122 sets	与主地网连接用 Connecting with the main and local network
12		膨胀螺栓 Expansion bolt	M10x120	327 sets	站内路灯固定用 Street lamp fixed
13		膨胀螺栓 Expansion bolt	M12x120	4 sets	站内投光灯固定用 Project-light lamp fixed
14		地脚螺栓 Anchor bolt	M18x800 (土建预埋 Civil construction pre-buried)	48 sets	高杆路灯固定用 High rod lamp fixed
15		螺栓 Bolt	M8x25	122sets	灯具接地用 Lamp for earthing
16		电缆 Cables	ZB-YJV22-0.6/1.0-2x4	330 m	本卷册只开列ZMX1的电缆 This volume only list the cables of ZMX1 材料甲供 Supplied by the CET

Reference Drawings

Drwg. No.	Title

Revisions

	Name	Date	Notes

巴基斯坦默蒂亚里—拉合尔±660kV直流输电工程
±660kV HVDC Project from Matiari to Lahore in Pakistan

NATIONAL TRANSMISSION & DESPATCH COMPANY (NTDC) LIMITED PAKISTAN

CONTRACTOR 国家电网 STATE GRID 中国电力技术装备有限公司 CHINA ELECTRIC POWER EQUIPMENT AND TECHNOLOGY CO.,LTD.

SUBCONTRACTOR East China Electric Power Design Institute Co.,Ltd.

拉合尔±660kV换流站
±660kV Lahore Converter Station

设计阶段 PHASE: 施工图 Detail Design

M L H V D C - L C S - E C I - D D - E C - 0 4 0 2 - 0 0 6 A

	姓名 Name	日期 Date
设计 Designed	香方惠	2019.07.01
校核 Checked	李艳辉	2019.07.02
审核 Reviewed		
批准 Approved	郑煜	2019.07.03

材料汇总表
Material summary list

比例 Scale | 图号 DWG NO. 30-B003701S-D0402-006 | 版本 REV. A

297X420